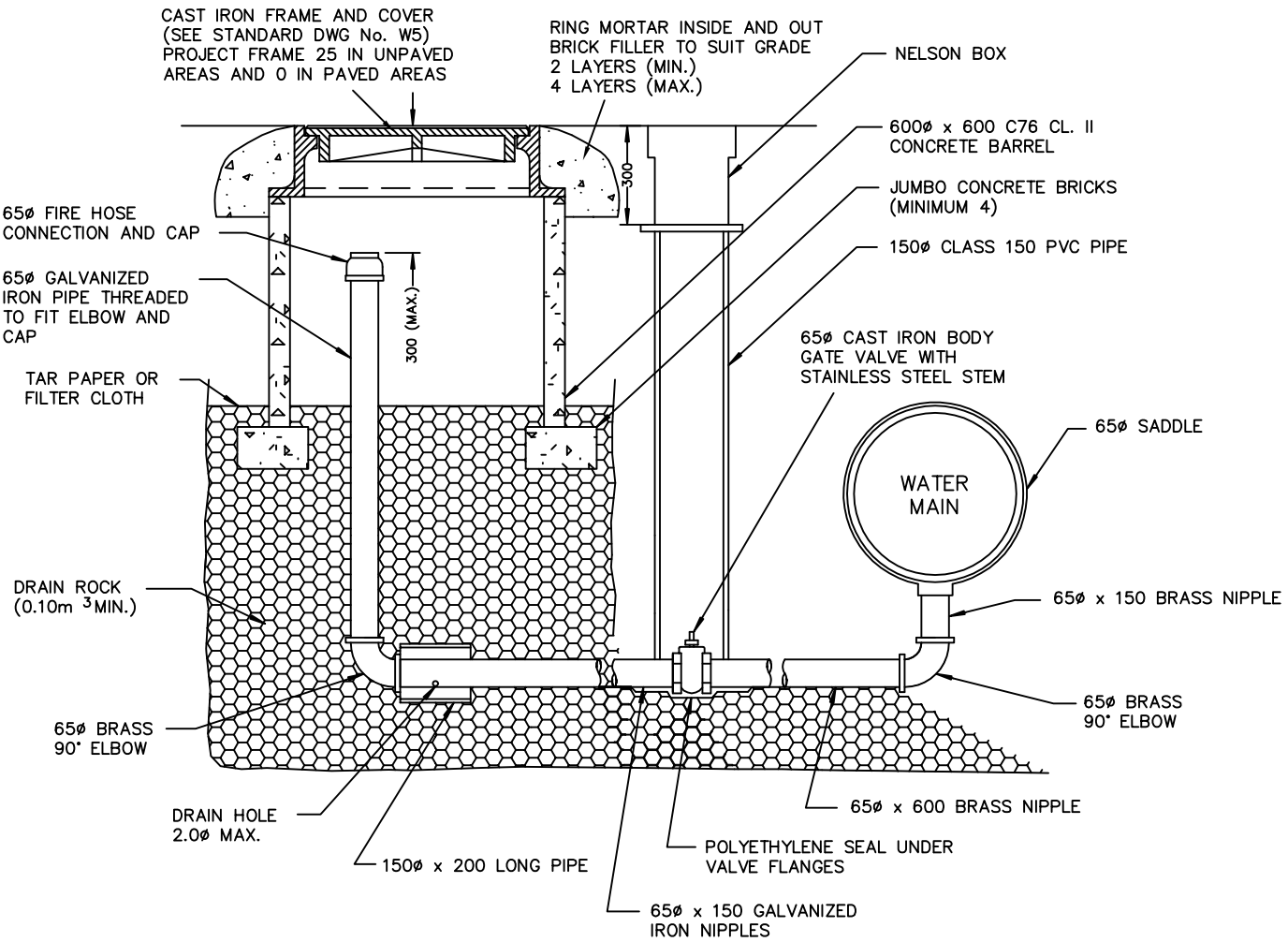

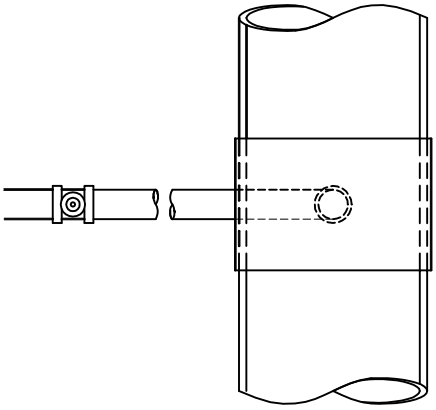

NOTES:

1. NOMINAL TRENCH WIDTH FOR FLUSHOUT IS 600mm
   VALVE BOX NOT TO CONFLICT WITH CURB AND GUTTER
   CURB AND GUTTER NOT SHOWN
2. LETTERING ON MANHOLE COVER SHALL REFER TO
   "TOWN OF LADYSMITH WATERWORKS"
   LETTERING SHALL BE 25 FLATTENED FACE GOTHIC
   LETTERING WITH FACE OF LETTERS RAISED TO THE
   SAME ELEVATION AS THE TOP OF THE RIBS
3. NOT TO BE USED IN AREAS WHERE WATER TABLE
   COULD BE ABOVE FIRE HOSE CONNECTION
4. SURROUNDING GRADE TO DRAIN AWAY FROM COVER
5. CHAMBER MUST BE SELF DRAINING
6. 150 ø X 200 PIPE TO BE PLACED AROND PIPE
   AT DRAIN HOLE TO PREVENT EROSION.
7. ONLY PRODUCTS APPROVED BY THE TOWN
   ENGINEER WILL BE ACCEPTED FOR INSTALLATION

DIMENSIONS ARE IN MILLIMETRES UNLESS OTHERWISE NOTED

TOWN OF LADYSMITH ENGINEERING STANDARD	BELOW GRADE SILT FLUSHOUT DETAIL	DATE: FEB. 1994 APP. BY: DRAWING No. W2B / REV. 01