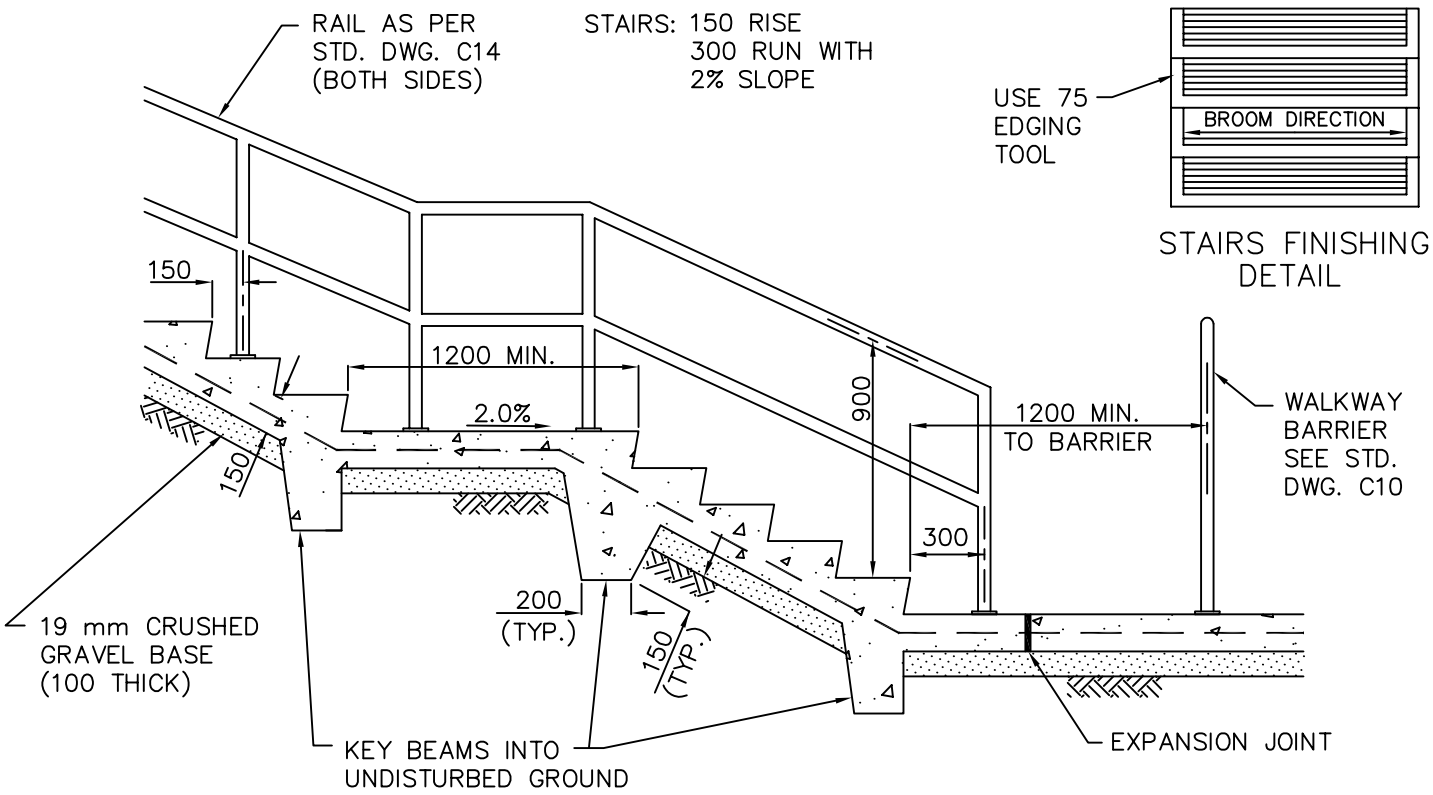

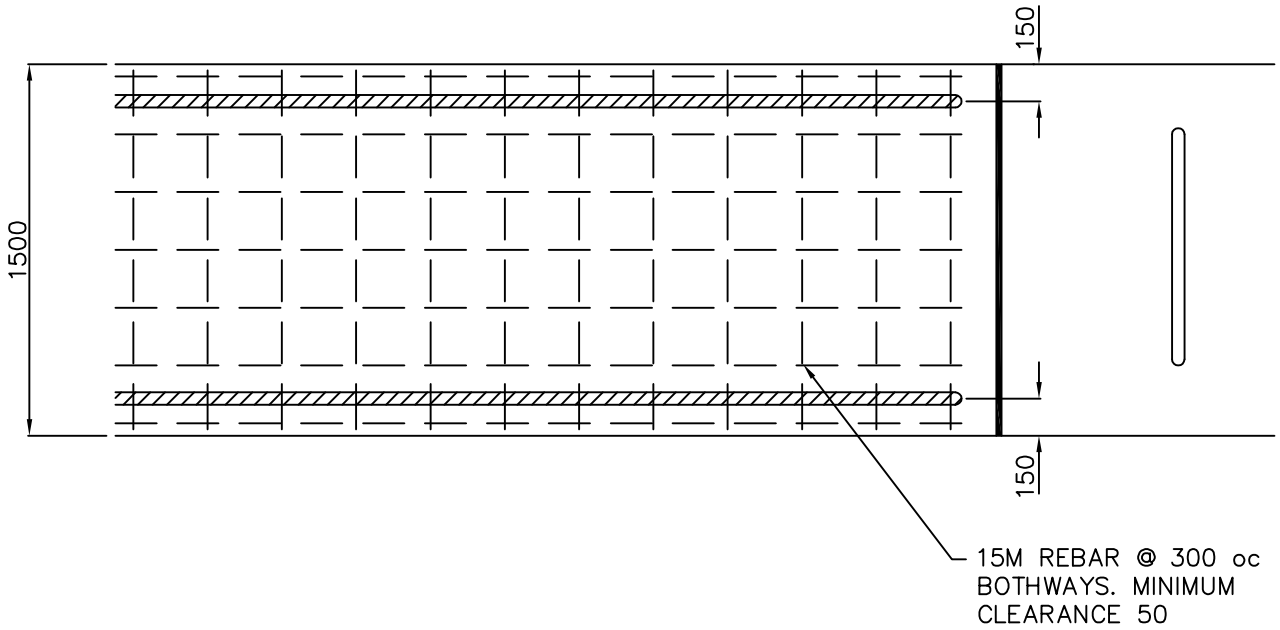

NOTES:

1. MAXIMUM OF 12 RISERS PER FLIGHT BETWEEN LANDINGS
2. MAXIMUM WALKWAY GRADIENT IS 12%
3. REFER TO SECTION 10 FOR CONCRETE SPECIFICATIONS
4. REINFORCING BARS TO CSA G30.18 GRADE 400
5. REFER TO STD. DWG. C14 FOR HANDRAIL DETAILS

DIMENSIONS ARE IN MILLIMETRES UNLESS OTHERWISE NOTED

TOWN OF LADYSMITH ENGINEERING STANDARD	STAIRWAY AND LANDING	DATE: JAN. 2005 APP. BY:
		DRAWING No. C13 / REV. 01